U16 Female -52kg

Competitors A

#	Name	Grade	Club	1	2	3	4	Wins	Pts	Pos
1	Wish KEIRSTEAD	Brown	Pacific Kodokan Dojo	XX	10	10		2	20	2
2	Evelina KHAZHEVSKAIA	Green	Kizuna Judo Club		XX	10		1	10	3
3	Aeryn PADMORE	Green	Kokushikai			XX		0	0	4
4	Megan AU	Blue	Peak Judo Club	10	10	10	XX	3	30	1

Matches A

Match	White			Blue	Result	Time	Code
D-1	**Wish KEIRSTEAD**	1	2	Evelina KHAZHEVSKAIA	10 - 0	0:24	IPO
D-2	Aeryn PADMORE	3	4	**Megan AU**	0 - 10	0:39	IPO
D-11	**Wish KEIRSTEAD**	1	3	Aeryn PADMORE	10 - 0	0:58	IPO
D-12	Evelina KHAZHEVSKAIA	2	4	**Megan AU**	0 - 10	0:26	IPO
D-21	Wish KEIRSTEAD	1	4	**Megan AU**	0 - 10	2:25	IPO
D-22	**Evelina KHAZHEVSKAIA**	2	3	Aeryn PADMORE	10 - 0	1:56	IPO

Competitors B

#	Name	Grade	Club	5	6	7	Wins	Pts	Pos
5	Norah MCTAVISH	Green	Kokushikai	XX			0	0	3
6	Harsaya KHOSA	Green	Abbotsford	10	XX		1	10	2
7	Trinity FOSTERSON	Green/Blue	Nanaimo	10	10	XX	2	20	1

Matches B

Match	White			Blue	Result	Time	Code
D-3	Norah MCTAVISH	5	6	**Harsaya KHOSA**	0 - 10	2:04	IPO
D-13	Norah MCTAVISH	5	7	**Trinity FOSTERSON**	0 - 10	0:12	IPO
D-23	Harsaya KHOSA	6	7	**Trinity FOSTERSON**	0 - 10	1:19	IPO

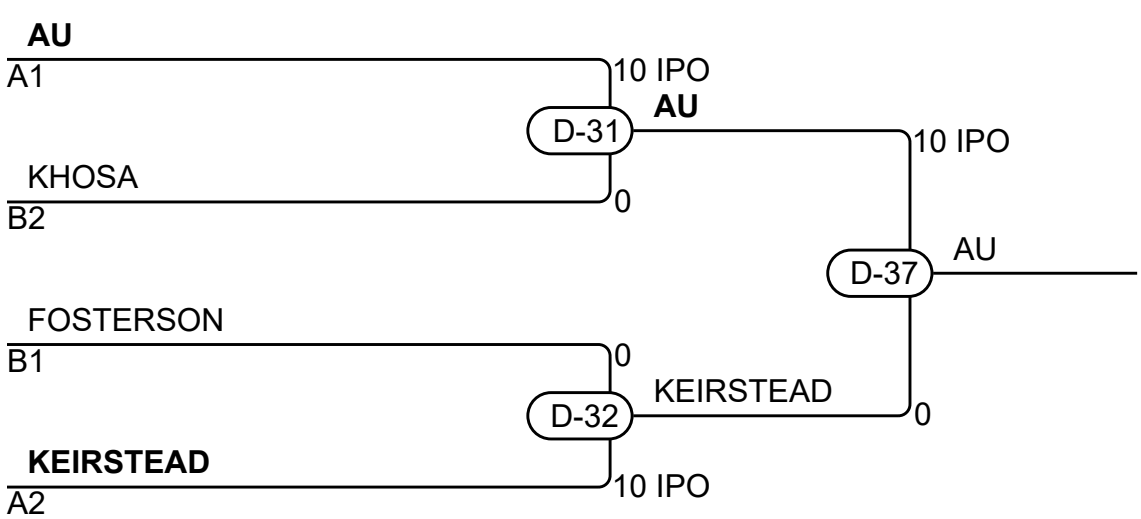

Results

Pos	Name
1	Megan AU, Peak Judo Club
2	Wish KEIRSTEAD, Pacific Kodokan Dojo
3	Harsaya KHOSA, Abbotsford
3	Trinity FOSTERSON, Nanaimo